1. General Description

A: COMPONENT

1. SRS AIRBAG

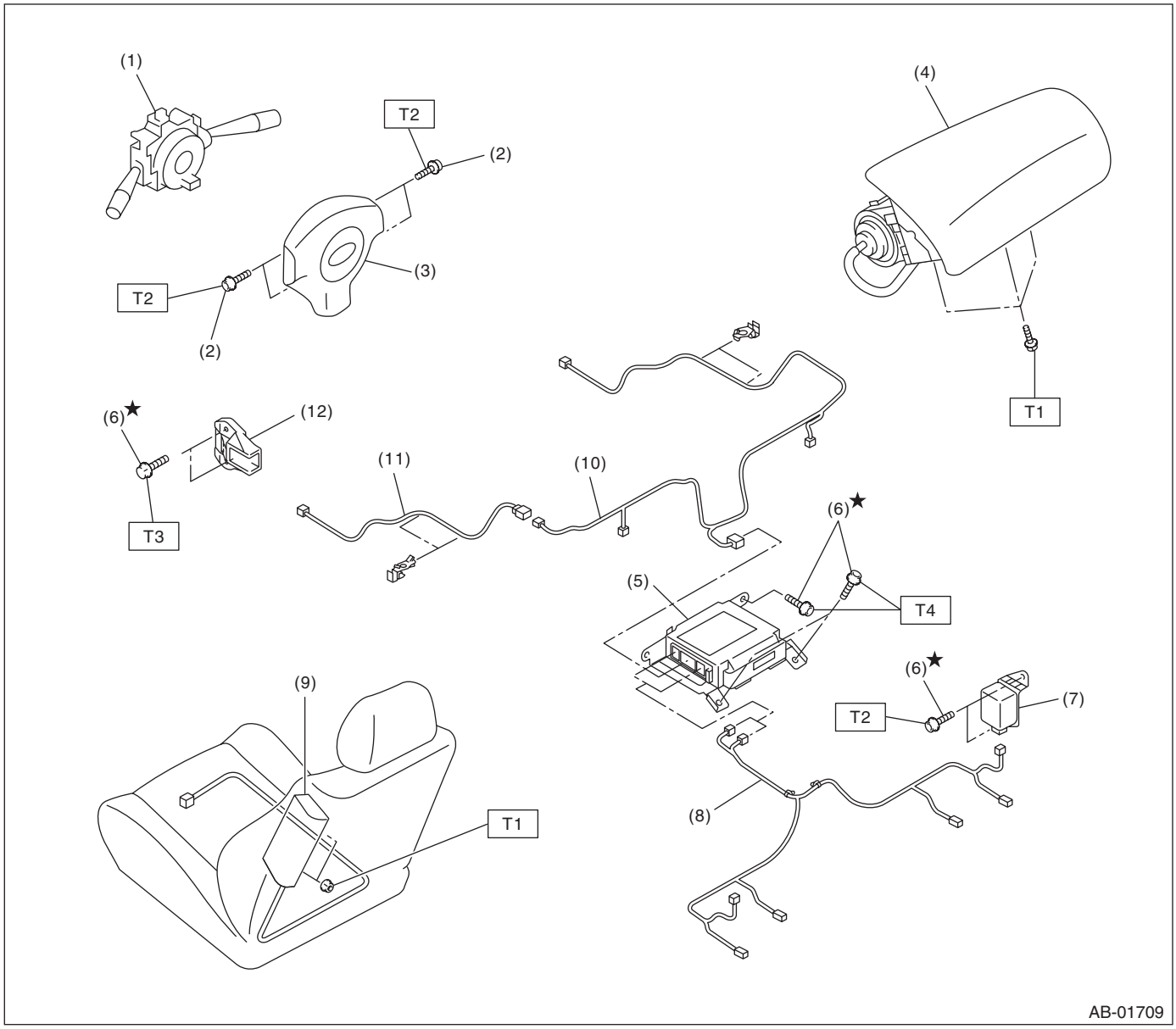

(1)	Combination switch ASSY with roll connector	(7)	Side airbag sensor
(2)	TORX® bolt T30	(8)	Side airbag harness
(3)	Airbag module ASSY (Driver)	(9)	Side airbag module
(4)	Airbag module ASSY (Passenger)	(10)	Airbag main harness
(5)	Airbag control module	(11)	Front sub sensor harness
(6)	Bolt (exclusive use)	(12)	Front sub sensor

Tightening torque:N·m (kgf-m, ft-lb)

T1: 7.5 (0.76, 5.5)
T2: 10 (1.0, 7.4)
T3: 13 (1.3, 9.6)
T4: 25 (2.5, 18.4)

B: CAUTION

- When servicing a vehicle, be sure to turn the ignition switch to OFF, disconnect the ground cable from battery, and wait for 20 seconds or more before starting work.
- The airbag system is fitted with a backup power source. After disconnecting the battery ground cable, be careful because the airbag may deploy if you do not wait for 20 seconds or more before starting airbag system servicing.

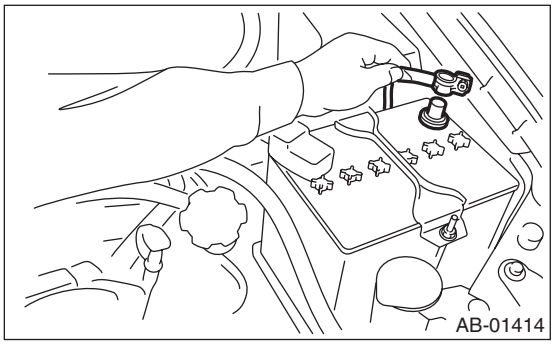

- If the airbag warning light illuminates, repair the vehicle immediately. Otherwise, the airbag or pretensioner may inflate incorrectly, or not inflate in collision.
- If sensors, airbag module, airbag control module, pretensioner or harness is deformed or damaged, replace with new parts.

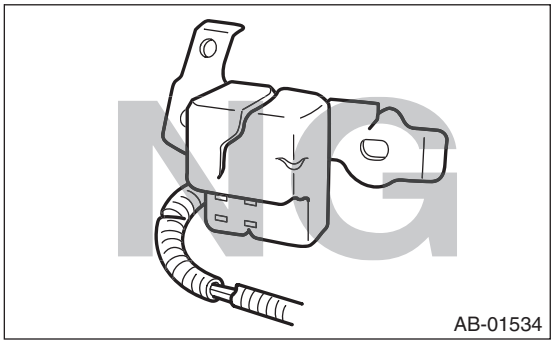

- When checking the airbag system, be sure to use a digital circuit tester. Use of an analog circuit tester may cause the airbag to activate erroneously due to a minimal current inside tester.

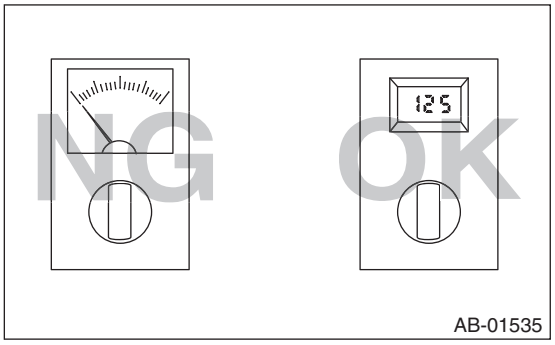

- When checking, use a test harness (1). Damage to connector terminal cause malfunction. Do not directly apply the tester probe to connector terminal of airbag.

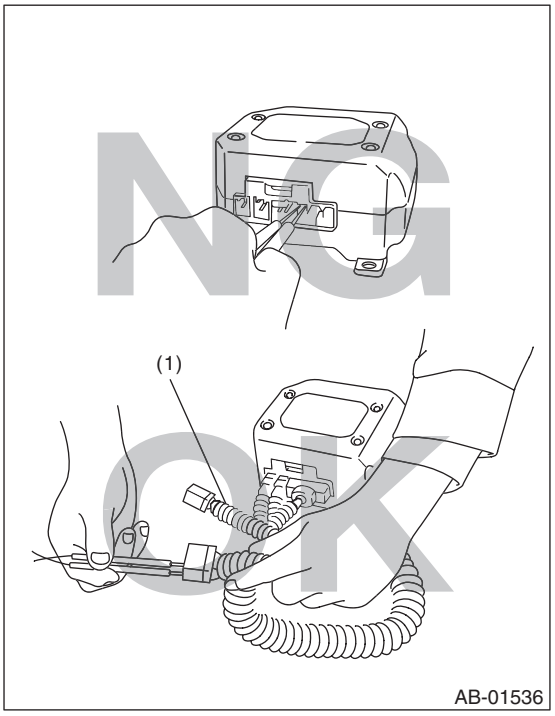

- Do not check continuity of the airbag modules for driver's side, passenger's side, or pretensioner.

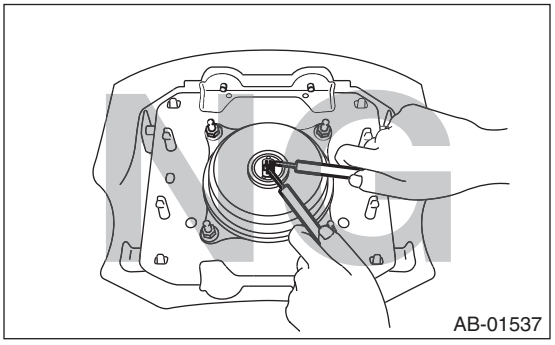

• Do not drop the airbag system parts, or keep them at high temperature of 93°C (199°F) or more, or let water, oil or grease get on them; the internal parts may be damaged and reliability greatly lowered.

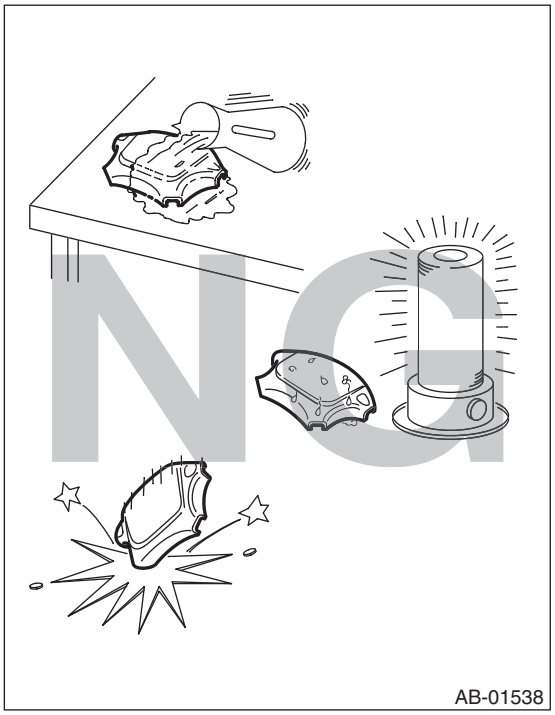

• If damage, open circuit or rust is found on airbag system wiring harness, do not use a soldering equipment to repair. Replace the faulty harness with a new genuine part.

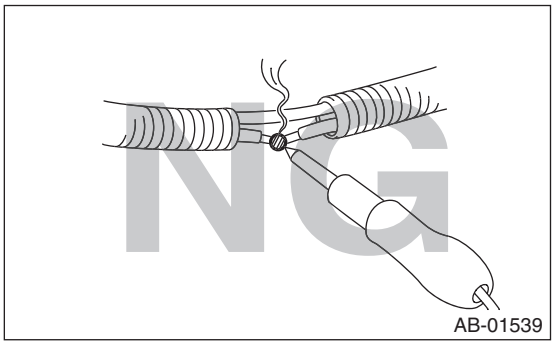

• Install the wiring harness securely with the specified clips to avoid interference or tangled with other parts.

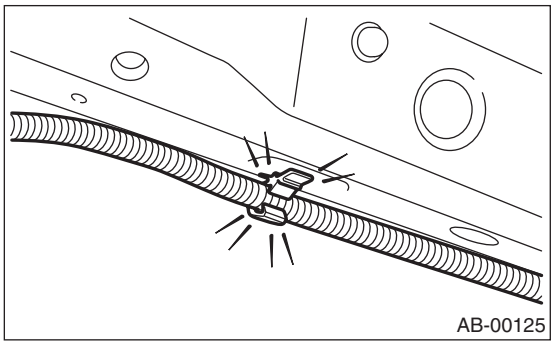

• Do not allow water or oil to come in contact with the connector terminals. Also, do not touch the connector terminals.

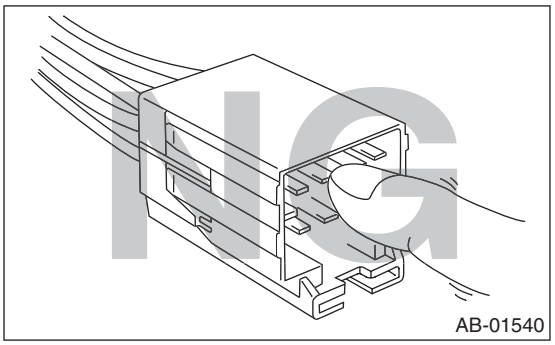

• Either of the airbag modules for driver's, passenger's and side or the pretensioner must not be disassembled.

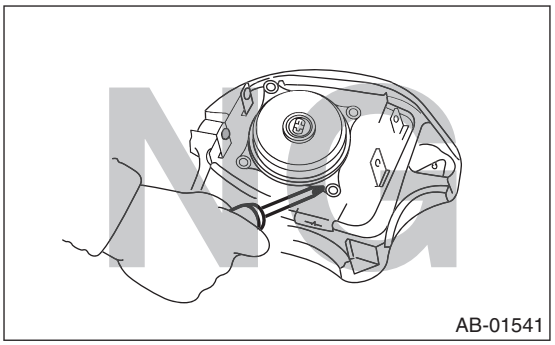

• The removed front seat with airbag module must be kept at least 200 mm (8 in) away from walls and other objects.

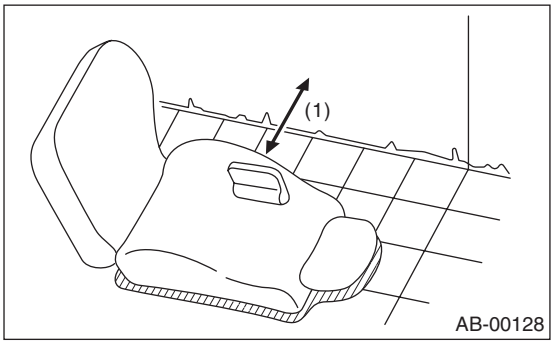

(1) 200 mm (8 in) or more

• Do not use the airbag or pretensioner parts from other vehicles. Always replace the defective parts with new parts.
• Never reuse a deployed airbag and pretensioner.
• When painting or performing sheet metal work on the front part of the vehicle, including the front wheel apron, front fender and front side frame, remove the front sub sensors and wiring harness of airbag system.

• When painting or performing sheet metal work on the side of the vehicle, including the side sill, center pillar and front and rear doors, remove the side airbag sensors and wiring harness of the airbag system.

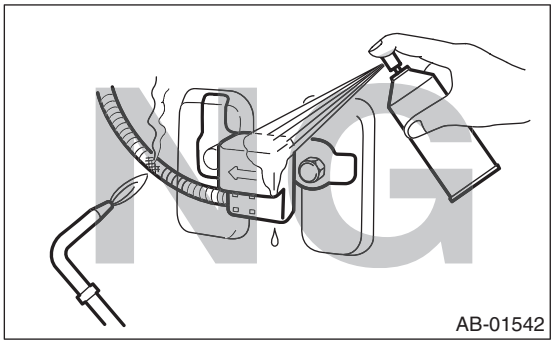

• Do not discard undeployed airbag module or pretensioner.
• After removing all the parts of airbag system, keep the airbag module with the pad side facing upward on a dry, clean and flat surface away from heat, light sources, moisture and dust.

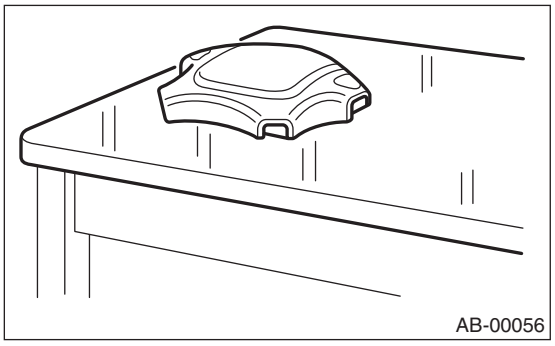

• When airbag control module, front sub sensor and side airbag sensor are removed, do not reuse the bolts and nuts. Always use new bolts and nuts for them.

- When storing a removed airbag module, do not place any objects on the module or stack them on top of each other. If the airbag inflates for some reason when it is placed with its pad side facing downward or under any object, a serious accident may result.

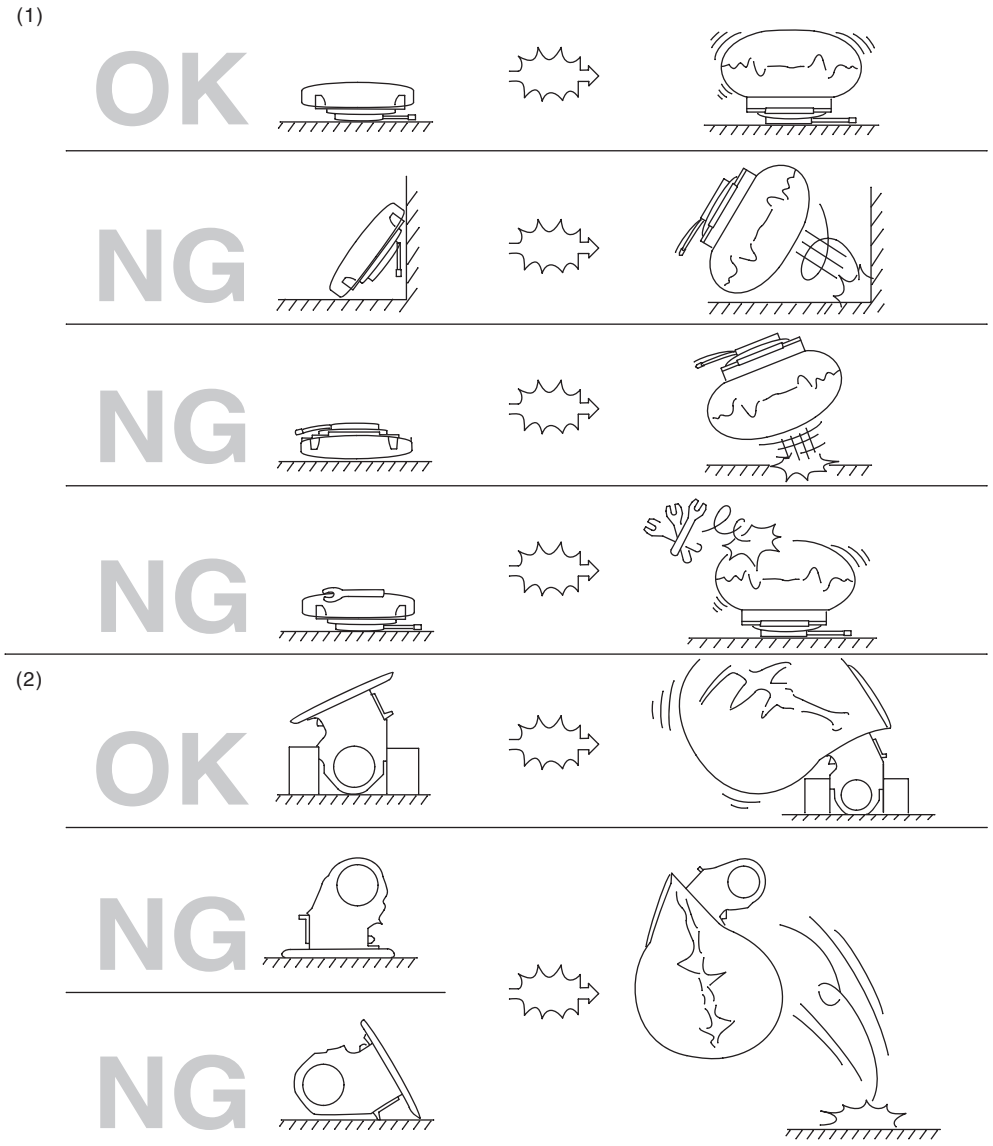

(1) Driver's airbag module (2) Passenger's airbag module

C: PREPARATION TOOL

1. GENERAL TOOL

TOOL NAME	REMARKS
TORX® T30	Used for removal/installation of driver's airbag module